FILTROS LISBOA CON VÁLVULA LATERAL
IML

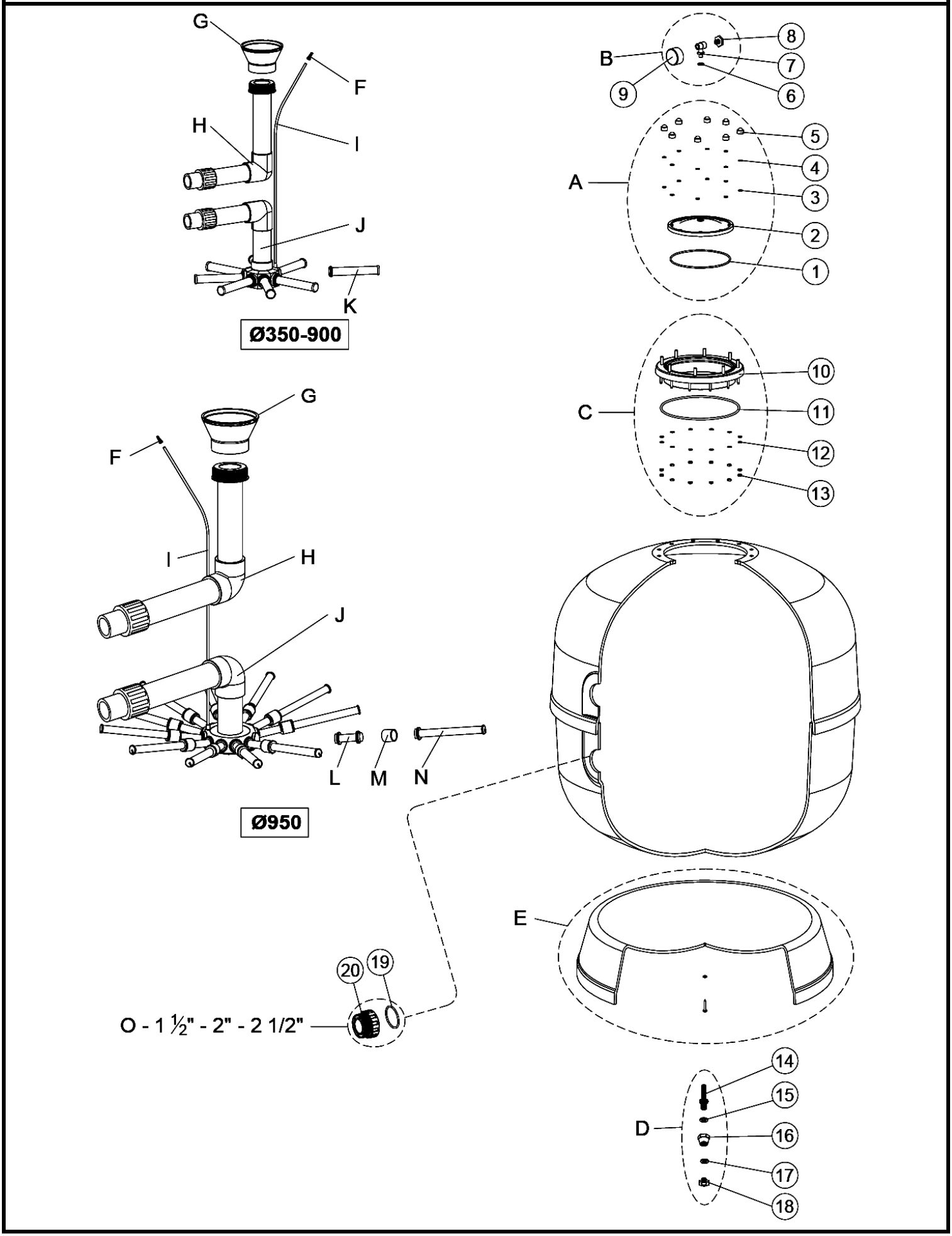

	LISB. LAT. "FS-"/"FS-G"/"FS-W"													
color filtro	AZUL / GRIS / BLANCO													
accesorios	NEGRO		**Filt.350**	**Filt.450**	**Filt.500**	**Filt.550**	**Filt.600**	**Filt.650**	**Filt.680**	**Filt.750**	**Filt.800**	**Filt.900**	**Filt.900-2**	**Filt.950**
tapa	NEGRA		IML	IML	IML	IML	IML	IML	IML	IML	IML	IML	IML	IML
	Código Filtro "FS-" Con Válvula		FV-350	FV-450	FV-500	FV-550	FV-600	FV-650	FV-680	FV-750	FV-800	FV-900	FV-900-2	FV-950
	Código Filtro "FS-G " Con Válvula		FV-350-G	FV-450-G	FV-500-G	FV-550-G	FV-600-G	FV-650-G	FV-680-G	FV-750-G	FV-800-G	FV-900-G	FV-900-2-G	FV-950-G
	Código Filtro "FS-" Sin Válvula		FS-350	FS-450	FS-500	FS-550	FS-600	FS-650	FS-680	FS-750	FS-800	FS-900	FS-900-2	FS-950
	Código Filtro "FS -G" Sin Válvula		FS-350-G	FS-450-G	FS-500-G	FS-550-G	FS-600-G	FS-650-G	FS-680-G	FS-750-G	FS-800-G	FS-900-G	FS-900-2-G	FS-950-G
Nº	**Componentes**	Cnt												
	Válvula Lateral Negra	1	PS-6103	PS-6103	PS-6103	PS-6103	PS-6103	PS-6103	PS-6103	PS-6104	PS-6104	PS-6104	PS-6200	PS-6200
A	Conjunto tapa IML Negra	1												
1	Junta d.209 x 6	1	FS16660-0402	FS16660-0402	FS16660-0402	FS16660-0402	FS16660-0402	FS16660-0402	FS16660-0402	FS16660-0402	FS16660-0402	FS16660-0402	FS16660-0402	FS16660-0402
2	Tapa Lago negra	1	FS16660-0401	FS16660-0401	FS16660-0401	FS16660-0401	FS16660-0401	FS16660-0401	FS16660-0401	FS16660-0401	FS16660-0401	FS16660-0401	FS16660-0401	FS16660-0401
3	Arandela Inox d.8DIN125 Iml	8	FS16660-0406	FS16660-0406	FS16660-0406	FS16660-0406	FS16660-0406	FS16660-0406	FS16660-0406	FS16660-0406	FS16660-0406	FS16660-0406	FS16660-0406	FS16660-0406
4	Tuerca Inox M-8 IML	8	FS16660-0405	FS16660-0405	FS16660-0405	FS16660-0405	FS16660-0405	FS16660-0405	FS16660-0405	FS16660-0405	FS16660-0405	FS16660-0405	FS16660-0405	FS16660-0405
5	Tapón embellecedor M -8 Negro	8	FS00470-0121	FS00470-0121	FS00470-0121	FS00470-0121	FS00470-0121	FS00470-0121	FS00470-0121	FS00470-0121	FS00470-0121	FS00470-0121	FS00470-0121	FS00470-0121
B	Kit manómetro	1												
6	Junta plana 18,5x12x2	1	FS00470-0319	FS00470-0319	FS00470-0319	FS00470-0319	FS00470-0319	FS00470-0319	FS00470-0319	FS00470-0319	FS00470-0319	FS00470-0319	FS00470-0319	FS00470-0319
7	Te manómetro 1/8" - 1/4"	1	FS00555-0401	FS00555-0401	FS00555-0401	FS00555-0401	FS00555-0401	FS00555-0401	FS00555-0401	FS00555-0401	FS00555-0401	FS00555-0401	FS00555-0401	FS00555-0401
8	Tapón purga 1/4"	1	FS074065008A	FS074065008A	FS074065008A	FS074065008A	FS074065008A	FS074065008A	FS074065008A	FS074065008A	FS074065008A	FS074065008A	FS074065008A	FS074065008A
9	Manómetro 1/8"	1	FS08077-0503	FS08077-0503	FS08077-0503	FS08077-0503	FS08077-0503	FS08077-0503	FS08077-0503	FS08077-0503	FS08077-0503	FS08077-0503	FS08077-0503	FS08077-0503
C	Conjunto aro cuello	1	FS20609-4000	FS20609-4000	FS20609-4000	FS20609-4000	FS20609-4000	FS20609-4000	FS20609-4000	FS20609-4000	FS20609-4000	FS20609-4000	FS20609-4000	FS20609-4000
10	Aro cuello negro	1	FS08076-5002	FS08076-5002	FS08076-5002	FS08076-5002	FS08076-5002	FS08076-5002	FS08076-5002	FS08076-5002	FS08076-5002	FS08076-5002	FS08076-5002	FS08076-5002
11	Junta tórica 255 x 4	1	FS722-2550040	FS722-2550040	FS722-2550040	FS722-2550040	FS722-2550040	FS722-2550040	FS722-2550040	FS722-2550040	FS722-2550040	FS722-2550040	FS722-2550040	FS722-2550040
12	Arandela INOX d.6	12	FS7012006000	FS7012006000	FS7012006000	FS7012006000	FS7012006000	FS7012006000	FS7012006000	FS7012006000	FS7012006000	FS7012006000	FS7012006000	FS7012006000
13	Tuerca INOX M-6	12	FS7012206000	FS7012206000	FS7012206000	FS7012206000	FS7012206000	FS7012206000	FS7012206000	FS7012206000	FS7012206000	FS7012206000	FS7012206000	FS7012206000
D	Kit purga de agua	1	FS00497-0700	FS00497-0700	FS00497-0700	FS00497-0700	FS00497-0700	FS00497-0700	FS00497-0700	FS00497-0700	FS00497-0700	FS00497-0700	FS00497-0700	FS00497-0700
14+15+16	Conjunto crepina purga 3/8"	1	FS00496-0503	FS00496-0503	FS00496-0503	FS00496-0503	FS00496-0503	FS00496-0503	FS00496-0503	FS00496-0503	FS00496-0503	FS00496-0503	FS00496-0503	FS00496-0503
14	Crepina purga 3/8"	1	FS00496-0501	FS00496-0501	FS00496-0501	FS00496-0501	FS00496-0501	FS00496-0501	FS00496-0501	FS00496-0501	FS00496-0501	FS00496-0501	FS00496-0501	FS00496-0501
15	Junta tórica 14 x 4	1	FS723-0140040	FS723-0140040	FS723-0140040	FS723-0140040	FS723-0140040	FS723-0140040	FS723-0140040	FS723-0140040	FS723-0140040	FS723-0140040	FS723-0140040	FS723-0140040
16	Tuerca purga 3/8" - 1/4"	1	FS00496-0502	FS00496-0502	FS00496-0502	FS00496-0502	FS00496-0502	FS00496-0502	FS00496-0502	FS00496-0502	FS00496-0502	FS00496-0502	FS00496-0502	FS00496-0502
17	Junta tórica 13x 3	1	FS16660-0419 VFS1050-8	FS16660-0419 VFS1050-8	FS16660-0419 VFS1050-8	FS16660-0419 VFS1050-8	FS16660-0419 VFS1050-8	FS16660-0419 VFS1050-8	FS16660-0419 VFS1050-8	FS16660-0419 VFS1050-8	FS16660-0419 VFS1050-8	FS16660-0419 VFS1050-8	FS16660-0419 VFS1050-8	FS16660-0419 VFS1050-8
18	Tapón purga 1/4"	1	FS024030092A VFS1050-9	FS024030092A VFS1050-9	FS024030092A VFS1050-9	FS024030092A VFS1050-9	FS024030092A VFS1050-9	FS024030092A VFS1050-9	FS024030092A VFS1050-9	FS024030092A VFS1050-9	FS024030092A VFS1050-9	FS024030092A VFS1050-9	FS024030092A VFS1050-9	FS024030092A VFS1050-9
E	Kit pié	1	FS16660-0408	FS00498-0400	FS16660-0422	FS16660-0422	FS16660-0423	FS16660-0423	FS16660-0423	FS16660-0425	FS16660-0425	FS16660-0428	FS16660-0428	FS16660-0428
F	Purga de aire	1	FS16660-0403	FS16660-0403	FS16660-0403	FS16660-0403	FS16660-0403	FS16660-0403	FS16660-0403	FS16660-0403	FS16660-0403	FS16660-0403	FS16660-0403	FS16660-0403
G	Difusor	1	FS08079-0415	FS08079-0415	FS08079-0415	FS08079-0415	FS08079-0415	FS08079-0415	FS08079-0415	FS08080-0416	FS08080-0416	FS08080-0416	FS08080-0416	FS08080-0416
G + rosca H	Cono + Soporte	1	FS08079-4000	FS08079-4000	FS08079-4000	FS08079-4000	FS08079-4000	FS08079-4000	FS08079-4000	FS08080-4000	FS08080-4000	FS08081-4000	FS08081-4000	FS08081-4000
***G**	Difusor antiguo	1		C-003	C-003		C-003	C-003		FS16660-0421		FS16660-0421		
H	Conjunto difusor	1	FS00497-0500	FS16660-0410	FS19781-0410	FS32706-0410	FS16661-0410	FS21071-0410	FS28479-0410	FS16662-0410	FS40964-0410	FS16663-0410	FS40965-0410	FS40965-0411
I	Tubo PVC 6 mm	1	FS04959-0430	FS04959-0430	FS04959-0431	FS04959-0431	FS04959-0431	FS04959-0431	FS04959-0431	FS04959-0432	FS04959-0432	FS04959-0432	FS04959-0432	FS04959-0433
J	Conjunto colector 1"	1	FS00497-0420	FS00498-0600	FS19781-0420	FS21110-0421	FS00499-0420	FS21071-0420	FS28479-0420	FS00500-0420	FS40964-0420	FS08133-0202	FS00501-0605	FS40965-0421
***J**	Conjunto colector 3/4	1		FS16660-0420	FS19782-0420		FS16661-0420	FS21072-0420		FS16662-0420		FS16663-0420		
K	Brazo colector 1"	8	C-007-1	C-007-1	C-007-1	C-007-1	C-006-1	C-006-1	C-006-1					
K	Brazo colector 1"	12								C-005-1	FS36661-0900	FS36661-0900	FS36661-0900	
***K**	Brazo colector 3/4"	8		C-007	C-007		C-006	C-005		C-005				
L	Brazo enllaç colector 100 mm 1"	12												C-008-1
M	Manguito 1"	12												C-009-1
N	Brazo colector 225mm 1"	12												C-005-1
***L**	Brazo colector 100mm 3/4"	12										C-008	C-008	
***M**	Manguito 3/4"	12										C-009	C-009	
***N**	Brazo colector 160mm 3/4"	12										C-006	C-006	
O	Kit de salidas	2												
19	Junta tórica Air relief adaptor	1	FS16660-0415 FS72306-00080	FS16660-0415 FS72306-00080	FS16660-0415 FS72306-00080	FS16660-0415 FS72306-00080	FS16660-0415 FS72306-00080	FS16660-0415 FS72306-00080	FS16660-0415 FS72306-00080	FS16660-0415 FS72306-00080	FS16660-0415 FS72306-00080	FS16660-0415 FS72306-00080	VFS723-0700065	VFS723-0700065
20	Rácord de salida	1	FS16660-0418	FS16660-0418	FS16660-0418	FS16660-0418	FS16660-0418	FS16660-0418	FS16660-0418	FS16660-0413	FS16660-0413	FS16660-0413	VFS00501-0409	VFS00501-0409
	Bolsa Accesorios	1	FS-16660-0510	FS-16660-0510	FS-16660-0510	FS-16660-0510	FS-16660-0510	FS-16660-0510	FS-16660-0510	FS-16660-0510	FS-16660-0510	FS-16660-0510	FS-16660-0510	FS-16660-0510