EN

INSTALLATION INSTRUCTIONS

INSTALLATION/CARE/MAINTENANCE/SAFETY INSTRUCTIONS

DEL

SLATTED COVER

LIVEPOOL COVER

CONTENTS

READ THESE INSTRUCTIONS CAREFULLY AND KEEP THEM FOR FUTURE REFERENCE

Read this manual carefully to ensure you understand all the information it contains and that the cover is safely installed, used and maintained. We cannot be held responsible in the event of damage resulting from failure to follow the instructions given in this manual.

INFORMATION ..... **p. 4**

INSTALLATION ..... **p. 5**

CARE / MAINTENANCE ..... **p. 10**

SAFETY INSTRUCTIONS ..... **p. 13**

RECYCLING ..... **p. 15**

DOWNLOAD

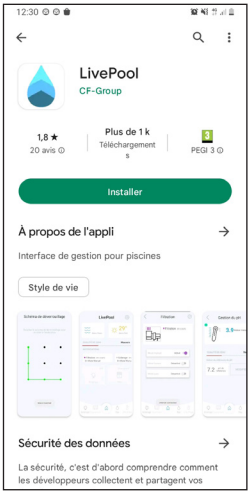

download the application

I'App Store

ios 12 et +

Google Play

Android 8 et +

Redox & pH

Automating pool water treatment!

Filtration

Clean water always!

Lighting

Customised atmosphere!

Water/Air temp.

Useful real time information!

Pool cover

Easily open and close your pool cover!

Complies with the NF P90-308 standard

CONTROL BOX

The electrical connection of the equipment must only be carried out by a qualified professional, and they must comply with the manufacturer's instructions in addition to the following applicable standards and regulations:

- NF C15-100: Low voltage electrical installations
- CEI 60364: Electrical installations for buildings

Please refer to the leaflet enclosed with the cabinet to ensure correct installation.

Incorrect installation may result in an electric shock, or it may even damage the equipment. We recommend that you disconnect the cabinet prior to any work being carried out on it.

Any specific electrical supply line must be protected by a 30mA circuit breaker along with a sufficient overcurrent protection device.

We recommend use of shielded cable with a nominal cross-section that is not lower than the one indicated in the following table:

Current specified for the equipment A	Nominal cross-section mm2
≤0.2	Flat twin tinsel cord a
> 0.2 and ≤ 3	0.5 a
> 3 and ≤ 6	0.75
> 6 and ≤ 10	1.0 (0,75) b
> 10 and ≤ 16	1.5 (1,0) b
> 16 and ≤ 25	2.5
> 25 and ≤ 32	4
> 32 and ≤ 40	6
> 40 and ≤ 63	10

NOTE: For power cables supplied with polyphase equipment, the nominal cross-section of the conductors is based on the maximum cross-section of the phase conductors at the end of the power cable that is intended to be connected to the terminals of the unit.

a These cables can only be used if their length, as measured between the point where the cable or cable protector enters the equipment and the connection to the mains supply, does not exceed 2m.

b Cables that have the cross-sections indicated in brackets can be used for mobile equipment if their length does not exceed 2m.

FEATURE OF THE LIVEPOOL

TECHNICAL CHARACTERISTICS	
Operating voltage	10 à 35 VDC
Power consumption (standby on)	1,5 W / 2,3 W
Contact	NO
Communication power	1A
Protection class	Classe 3
Protection class	IP 30
Frequency band used	2.412 à 2.485 MHz
Maximum radio frequency power	19.5 dbm
Tropicalized electronic board	Oui
Connection type	Bluetooth secured by pairing and unlocking scheme

INSTALLATION

The person carrying out the operation must ensure that there are no bathers present and always have a view of the pool during the opening and closing operations.

ABOVE GROUND COVER

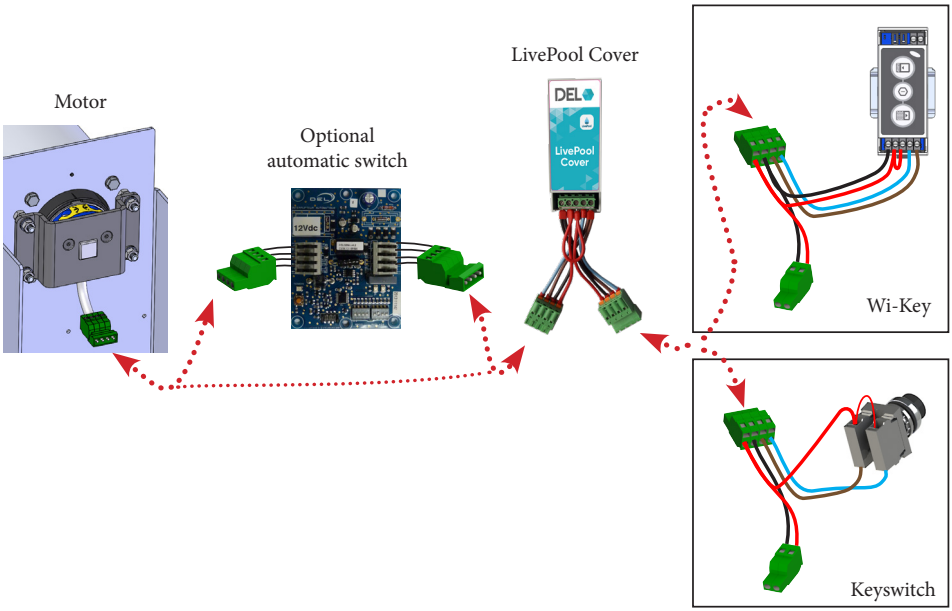

SUBMERGED OR ABOVE-GROUND SHUTTER WITH A POOL WIDTH > 8 METRES

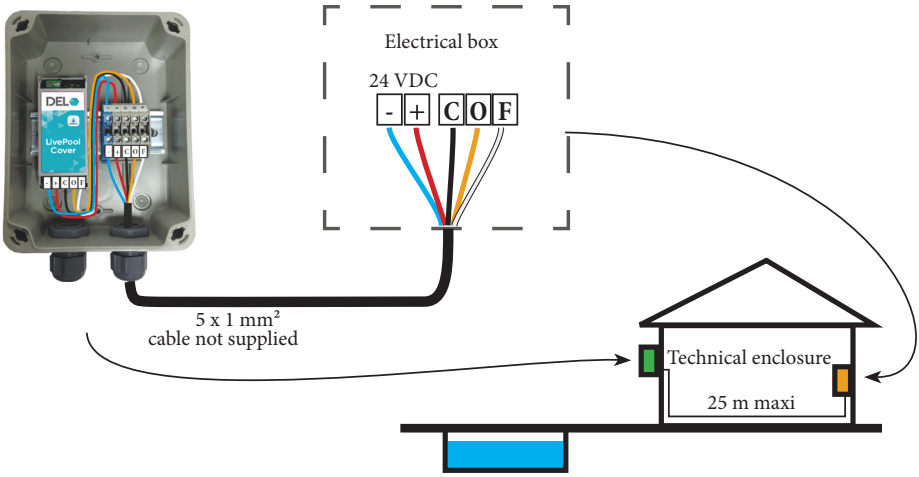

PROCEDURE FOR SETTING UP THE FIRST SMARTPHONE

1. Power-up the installation.
2. Download the LivePool application.
3. Start the application and choose "LOCAL" connection mode
4. Follow the procedure on your smartphone.

NB: For secure pairing, change the network name and the unlocking process

ADDITIONAL SMARTPHONE SETUP PROCEDURE

1. Power up the installation.	
2. Download the LivePool application	
3. Open the application and choose the "LOCAL" connection mode	
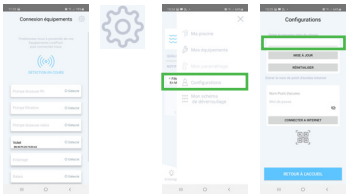	4. Open the "Setup" screen and give the network the same name as on the first smartphone. (find the name in the smartphone's Bluetooth network settings)
	5. Return to the "Equipment connection" step
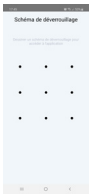	6. Set the same unlocking process as used by your installation.

For solar installations : Activate the «SOLAR» mode (Energy saving mode)
Cover / Settings / System Solar / Active.

RESET PROCEDURE

THE LIVEPOOL COVER RECEIVER CAN BE FOUND:

ABOVE GROUND COVER
--> In the motor unit

SUBMERGED OR ABOVE-GROUND SHUTTER WITH A POOL WIDTH > 8 METRES
--> In the remote unit

1. Close the phone.
2. Power down the installation
3. Press the RESET button (using a paperclip) and keep it pressed.
4. While still pressing the button, power up the installation once again and wait for 10 seconds before releasing the RESET button.

Your appliance will have returned to its factory configuration.

5. Reset the network name from the configuration screen and return to the "Equipment connection" step.

OPENING/CLOSING THE POOL

ALWAYS CHECK THAT THE POOL WATER LEVEL IS CONSTANT AND IN LINE WITH THE RECOMMENDATIONS SET OUT IN THIS MANUAL.
WHEN OPENING OR CLOSING THE COVER, YOU MUST ENSURE THAT THERE ARE NO SWIMMERS IN THE WATER AND ALWAYS KEEP AN EYE ON THE POOL.

- It is essential that the slatted cover is always fully opened or closed. Never leave it halfway.
- When using an automatic cleaner under the cover, check that the hose does not interfere with the movement of the slats when opening and closing the cover.
- It is essential that floating objects are removed from the surface of the water when closing the cover.
- Do not obstruct the slatted cover during rolling or unrolling.
- Do not operate the slatted cover in case of frost.
- Opening and closing the pool requires a single person (the process takes 2 minutes), and locking or unlocking the locking kits takes around 3 minutes.
- Never leave an object on the cover (towel, rubber ring, etc.) because strong sunlight can cause the slats to expand locally and the warranty will no longer be valid.
- Never cover a slatted cover with a product not designed for this purpose as the slats may become misshapen.

Any person working on the electrical parts must be qualified and must comply with the manufacturer's instructions and with the standards and regulations in force.

During any work, the technician must wear his PPE (personal protective equipment): gloves, glasses, mat, etc.

We recommend cutting off power to the installation before any work.

POOL WATER LEVEL

- For optimum safety and for the cover to work properly, always check that the pool water level remains constant and is in line with the manufacturer's recommendations (for better comfort, use an overflow and water level regulator).
- A level that is too high is the result of an overflow that is blocked by leaves or other objects.
- A level that is too low creates the risk of blockages.
- If the pool is built with a groove or a handrail, the water level must be controlled by a level regulator.

FILTRATION & WATER TREATMENT

- Schedule filtering during the hours the pool receives direct sunlight and have it running constantly when the water reaches 25°C.
- In order to guarantee the longevity of your installation, the pool water must be correctly treated according to the standards and recommendations in force (NF EN 16713-3)
- The pH, TH and TAC of the water should be checked and adjusted as often as necessary (however, care should be taken not to correct these 3 parameters independently of each other, but to do so using the Taylor table and balance the water according to the 3 parameters analysed).

CARE (responsibility of the customer)

- Clean your slatted cover thoroughly twice a year (when opening the pool for the season and when winterising it). This is even more important if your pool water is hard. To do this, use a descaling cleaner (see catalogue) and rinse with a water spray.
- Inspect the entire system if an abnormal load is placed on the cover (for example in the event of a fall).
- Inspect the straps annually.
- Do not wash IPE duckboard with a high pressure washer, we recommend washing them regularly with clean water and a non metallic brush.

WINTERISING

- Winterise the pool in a way that is adapted to its geographical location.
- Use the safety position to lock the cover.
- We recommend that you install an Ivernéa winter shift or an Ivernéa Plus protective covering to protect the slatted cover from UV rays and dirt.

MAINTENANCE

- All repairs must be carried out by a professional, who will contact the manufacturer if necessary.
- All spare parts must be original or comply with standards.
- Inspect the entire slatted cover.
- At the start of the season and in the event of an incident (a person falling, hail on the cover, abnormal force on the cover, etc.), it is essential to check that the slats do not show any visible damage that could compromise the cover's safety function (slats with cracks, holes, distortion, etc.). Replace the slats or the entire cover if necessary.
- In both summer and winter, do not place an opaque cover on top of the slatted cover.

This risks damaging the slats due to increased temperatures.

SAFETY INSTRUCTIONS

- **This cover is not a replacement for common sense or individual responsibility. Nor is it designed to replace the careful supervision of parents and/or responsible adults, which remains the crucial factor in protecting young children.**
- **WARNING: safety is only assured when the cover is closed, locked and correctly installed in accordance with the manufacturer's instructions.**
- **The cover must always be closed when away from the home, even for a short while.**
- **Check that there are no swimmers or items in the pool before and during closing.**
- **Store the tools needed to operate the cover out of the reach of children (e.g. the key).**
- **The mechanism must be operated by a responsible adult only.**
- **Do not climb, walk or jump on a safety cover.**
- **Take all necessary precautions to prevent young children from accessing the pool until necessary repairs to the cover have been made, if you notice a malfunction that prevents the pool from being closed and secured, in the event that the equipment or pool is temporarily unvailable**
- **Comply with the water levels stated by the manufacturer.**

Children could drown in under 3 minutes, and no protection of any kind will ever replace the attention and vigilance of a responsible adult.

RECYCLING

PACKAGING

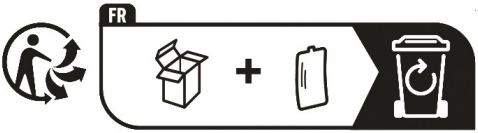

Dispose of the packaging in line with current rules and regulations.

END OF LIFE

- Do not throw away your discarded equipment or used batteries with unsorted household waste.
- It is your responsibility to dispose of all your waste, particularly electrical and electronic equipment, by taking it to a dedicated collection point for recycling.
- Certain products potentially contain substances that are hazardous to the environment, and these will be removed or neutralised.
- Find out about existing take-back and collection systems.

discard the manual in line with the current regulations.