PUMPEX JET PUMP

GEMAŞ Pumpex-Jet thermoplastic body countercurrent pump. Ideal for usage with jet nozzles, counter current systems, fountains or similar water attractions.



- 2850 rpm – IP55 motor
- Pump shaft in AISI 316 quality stainless steel
- Suction 2'', Return 1 1/2'' connection
- Connections are with unions
- Body made of fiber glass reinforced PP
- Impeller made of Noryl
- Plastic cap EU made high resistant bearing
- Monophase models with thermal switch

Product Information:

PERFORMANCE CURVES

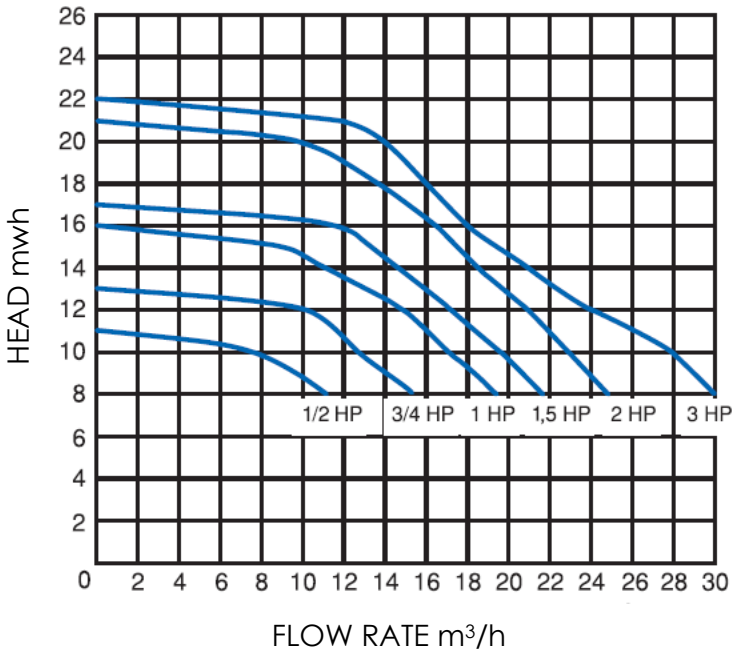

PUMP TYPE	HP	CONDENSER (µF)	AMPERES II 220V	AMPERES III 220V	AMPERES III 380V	HEAD mwh 8	10	12	14	15	16	18	20
						DISCHARGE m³/h							
0111PXJ50M	0,50	13	2,60			11,14	7,25	–	–	–	–	–	–
0111PXJ75M/T	0,75	20	3,80	3,70	–	15,33	12,64	10,00	–	–	–	–	–
0111PXJ100M/T	1	25	4,95	3,11	1,80	19,43	17,00	14,84	11,00	8,89	–	–	–
0111PXJ150M/T	1,5	30	7,80	4,41	2,55	21,65	19,47	17,12	14,57	13,30	11,36	–	–
0111PXJ200M/T	2	40	9,90	5,88	3,40	24,80	22,90	20,90	18,40	17,50	16,40	13,60	9,60
0111PXJ300M/T	3	40	–	8,00	4,90	32,00	30,00	28,00	26,00	25,00	23,50	21,00	17,00

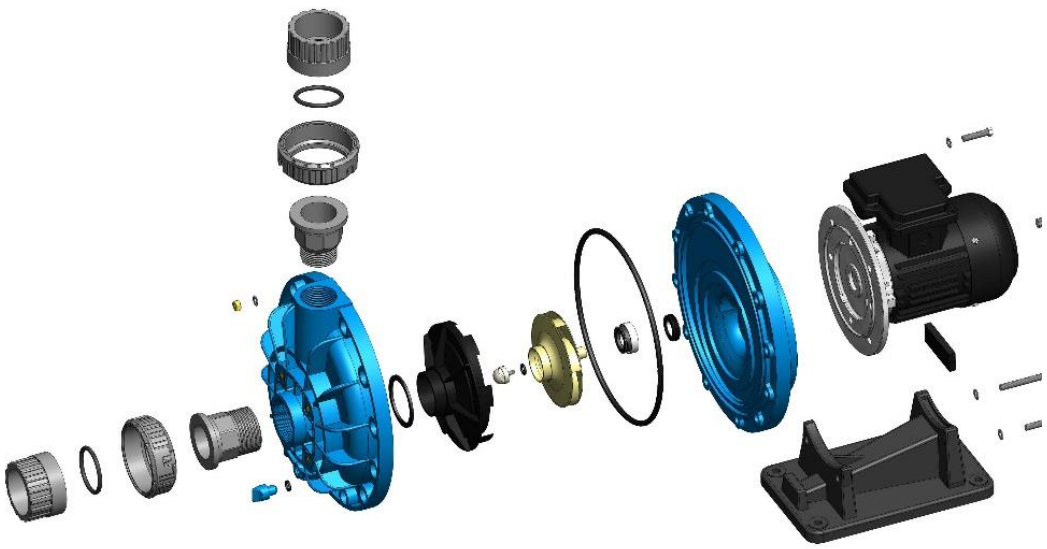

CODE	DESCRIPTION
0111PX10	PUMPEX - FRONT PUMP BODY
0111PX12	PUMPEX - BODY O-RING 264X250X7
0111PX13	PUMPEX - DIFFUSER GASKET 70X6
0111PX14	PUMPEX - DIFFUSER
0111PX1604	PUMPEX IMPEILER 2 HP
0111PX17	PUMPEX - MECHANICAL SEAL COMPLETE
0111PX18	PUMPEX - REAR BODY PUMP
0111PX24	IMBUS SCREW M10X20
0111PX25	PUMPEX - PUMP LEG
0111PX26	PUMPEX RUBBER FOOT PUMP SUPPORT FOR
0111STR02	DRAIN PLUG
0111STR03	O-RING FOR DRAIN PLUG
0111STR37N	COUNTER SCREW İNOX
2132003	INOX WASHER M5
13111512	Ø 50 PVC BALL VALVE NUT
13211601	Ø 63MM UNION BODY
13212201	Ø 63 PVC UNION GEAR PART 2"
132123R01	Ø 63-50 PVC REDUCTION WITH A UNION GEAR PART
8500399	M8X70 INOX SCREW
850041	M8x30 Grass Nut
860281	Ø 63MM PVC UNION O-RING 53,34X5.34
2132010	INOX SCREW M8X30

Dimensions:

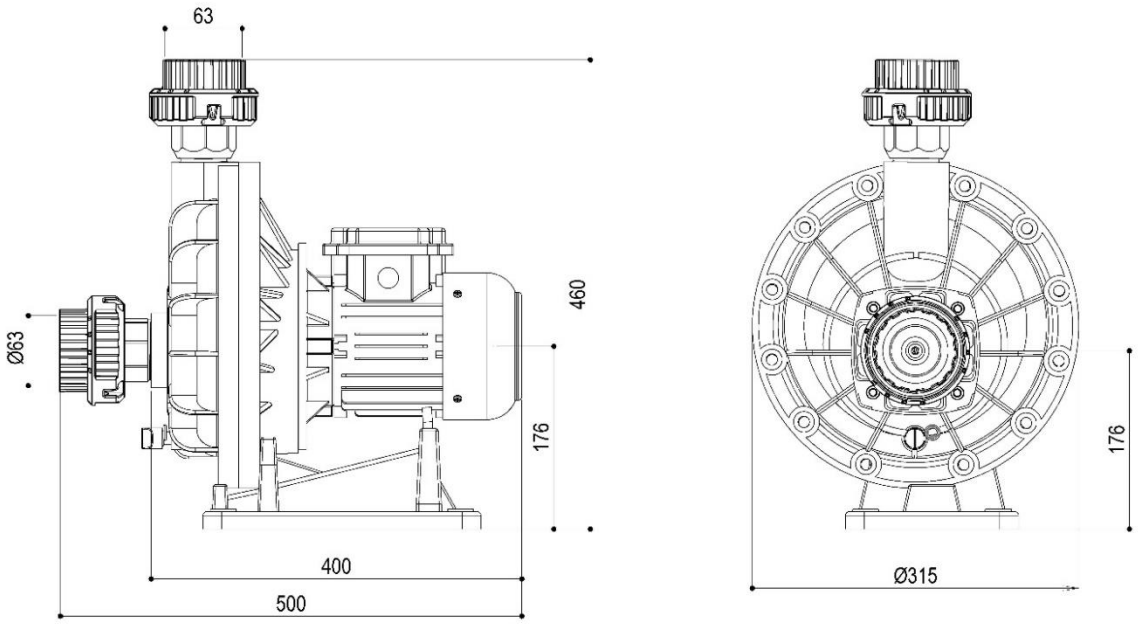

All dimensions are in mm.

"Pool Technology"